OA109 'XC Series'

AC Fan - 115V, 230V
120x38mm (4.7"x 1.5")

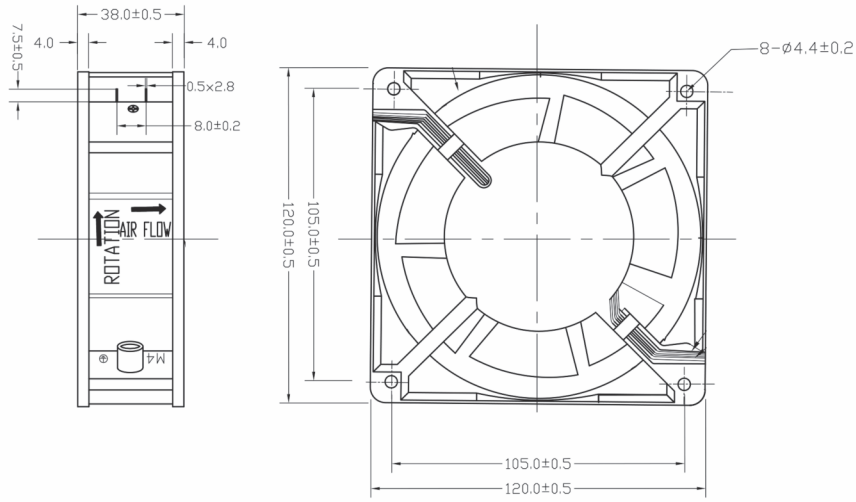

Frame	Diecast Aluminum
Impeller	PBT, UL94V-0 plastic
Connection	2x Lead wires (24AWG*) or Terminals
Motor	AC capacitor drive, thermally protected
Bearing System	Dual ball
Insulation Resistance	>100M ohm between lead-wire and frame (500VDC)
Dielectric Strength	1 min at 1500 VAC, 50/60Hz

Operating Temperature
Ball Bearing
-10C ~ +65C
Storage Temp
-20C ~ +80C

Life Expectancy
Ball Bearing
60,000 hours (L10 at 40C)

(* Wires ~300mm)

Weight: ~1.12 lbs.

m4

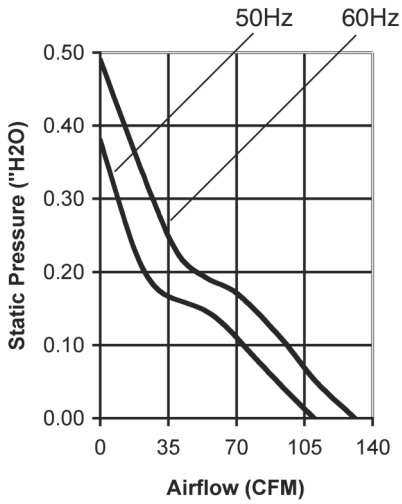

Part Number	OA109AP-11-1 * B XC	OA109AP-22-1 * B XC
Nominal Voltage	115 VAC	230 VAC
Rated Power (50/60 Hz)	21 / 22 W	21 / 22 W
Nominal Current	0.17 / 0.18 A	0.10 / 0.11 A
Frequency (Hz)	50 / 60	50 / 60
Rated Speed (RPM)	2800 / 3300	2800 / 3300
Airflow (CFM)	110 / 131	110 / 131
Noise Level (dB)	43 / 47	43 / 47
Max. Static Pressure	0.38" / 0.49" H_2O	0.38" / 0.49" H_2O

* Insert "T" to specify Terminal or "W" to specify Wire leads

Knight Electronics, Inc.
10557 Metric Drive
Dallas, Texas 75243
214-340-0265

RoHS Compliant

Orion Fans
Information and data is subject to change without prior notification.