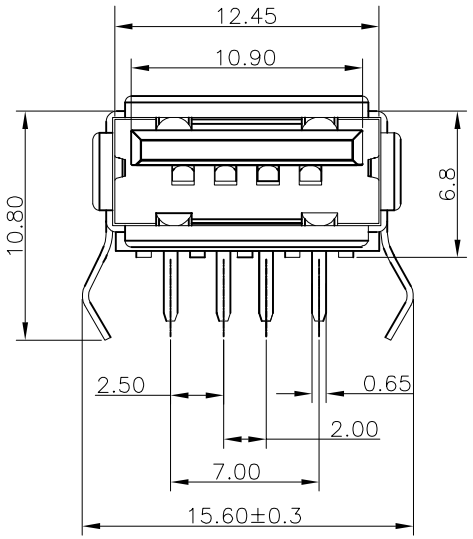


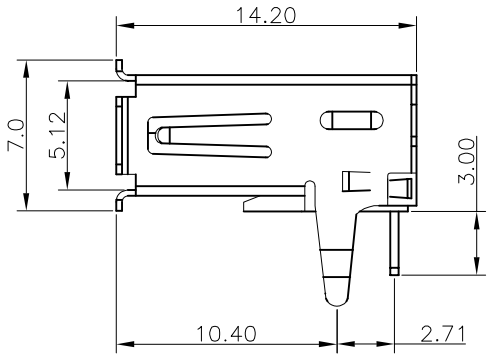


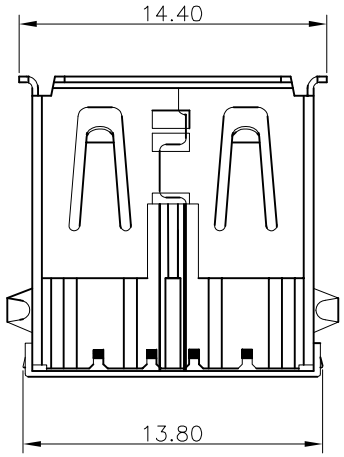


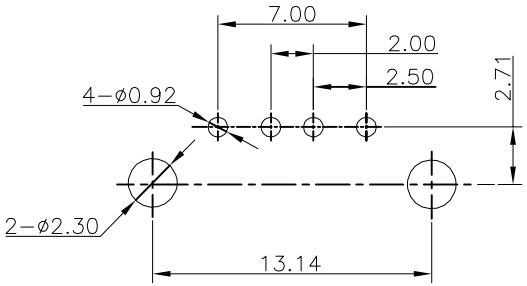


RECOMMENDED P.C.B LAYOUT
(TOLERANCE:±0.05)

NOTES:

1.Material:
- 1.1 Housing: PBT+30%GF UL94V-0, Color White
- 1.2 Shell: Brass
- 1.3 Contact :Phosphor Bronze

2. FINISH:
- 2.1 Contact Area: Selective 5u"Au
  - Solder Area:Tin Plated
  - Under: Ni Plated

3.MECHANICAL:
- 3.1 Mating Force:3.57kgf Max.
- 3.2 Unmating Force:1.02kgf Min
- 3.3 Durability:1500 cycles Min

4.ELECTRICAL:
- 4.1 Current Rating:1.5A
- 4.2 Dielectric Strength:500V AC FOR 1 MINUTE
- 4.3 Contact Resistance:30mΩ Max
- 4.4 Insulation Resistance:1000 MΩ Min

5.Operating temperature: -55°C TO +85°C

6.PACKIING: Tray

**RoHS compliant**

| | |
|---|---|
| Scale | Free |
| TOLERANCE | |
| .X | ±0.30 |
| .XX | ±0.20 |
| .XXX | ±0.10 |
| DIM | TOL |
| X.° | ±5° |
| Angle | TOL |
| UNIT | mm |

| Id. | Modification | Date | Name |
|---|---|---|---|
| 1 | Change the P/N AU-Y1005-R to AU-Y1005 | 25.11.2013 | Winnie |
| 0 | Drawn | 07.06.2013 | Winnie |

| | Date | Name |
|---|---|---|
| Drawn | 07.06.2013 | Winnie |
| Approved | 25.11.2013 | Winnie |

ASSMANN WSW components

Customer-No.

ASSMANN WSW-No.
1 AU-Y1005

Drawing-No.
ASS 5773 CO

rev01

Replace

SHEET